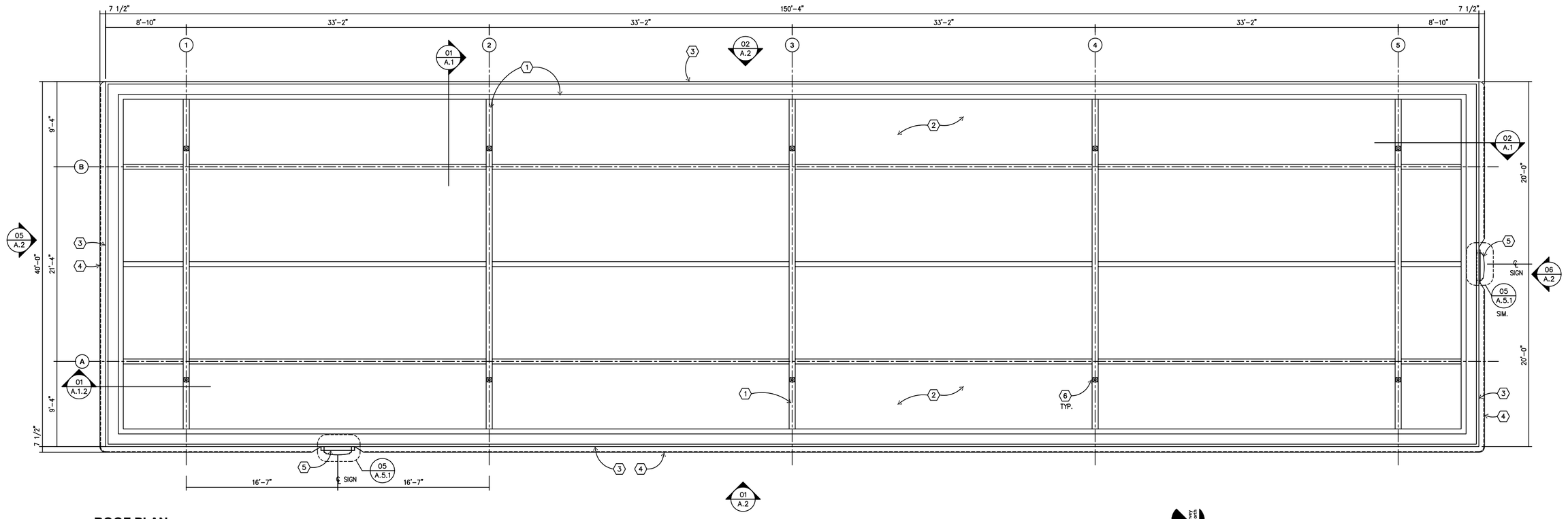

ROOF PLAN
SCALE: 1/8" = 1'-0"

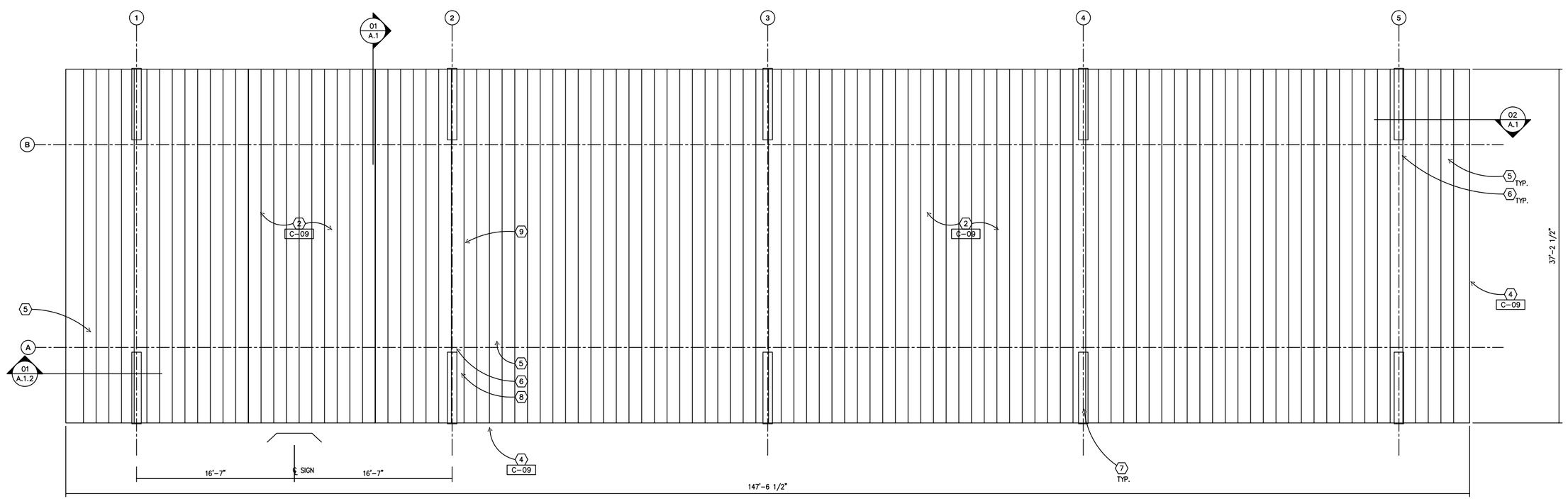

REFLECTED CANOPY PLAN
SCALE: 1/8" = 1'-0"

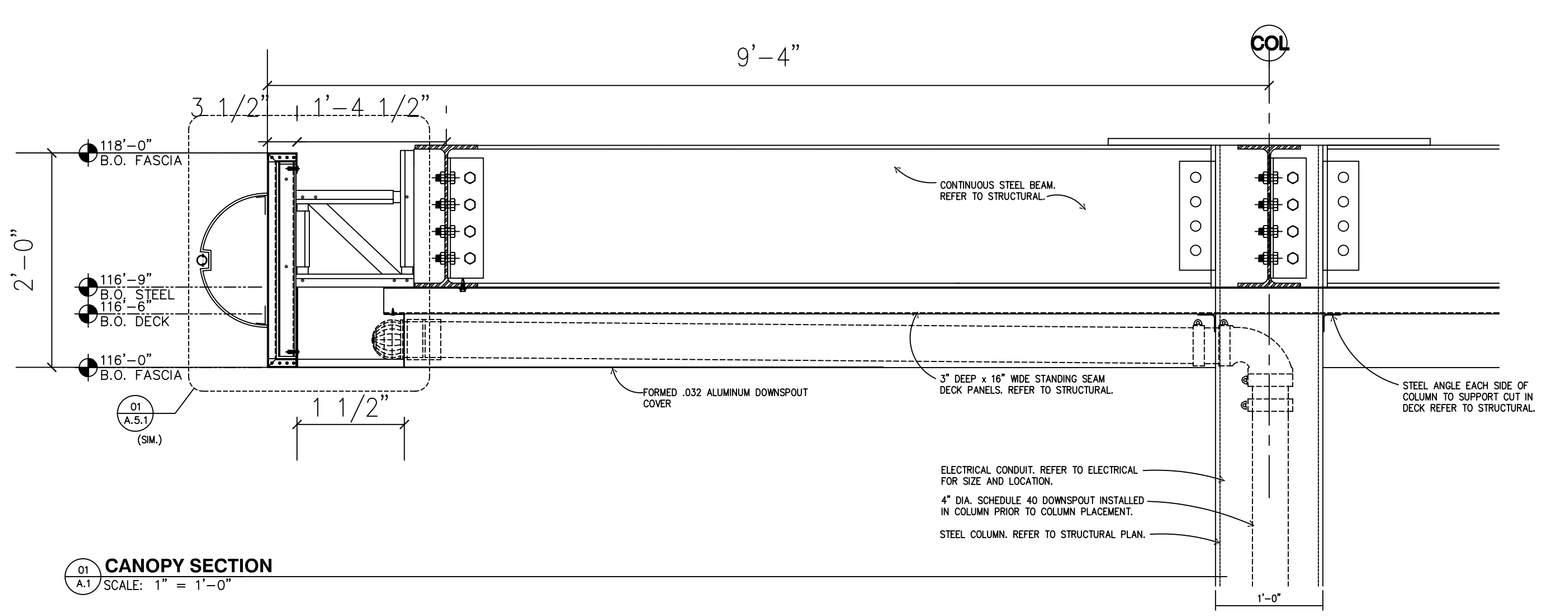

01 A.1 CANOPY SECTION
SCALE: 1" = 1'-0"

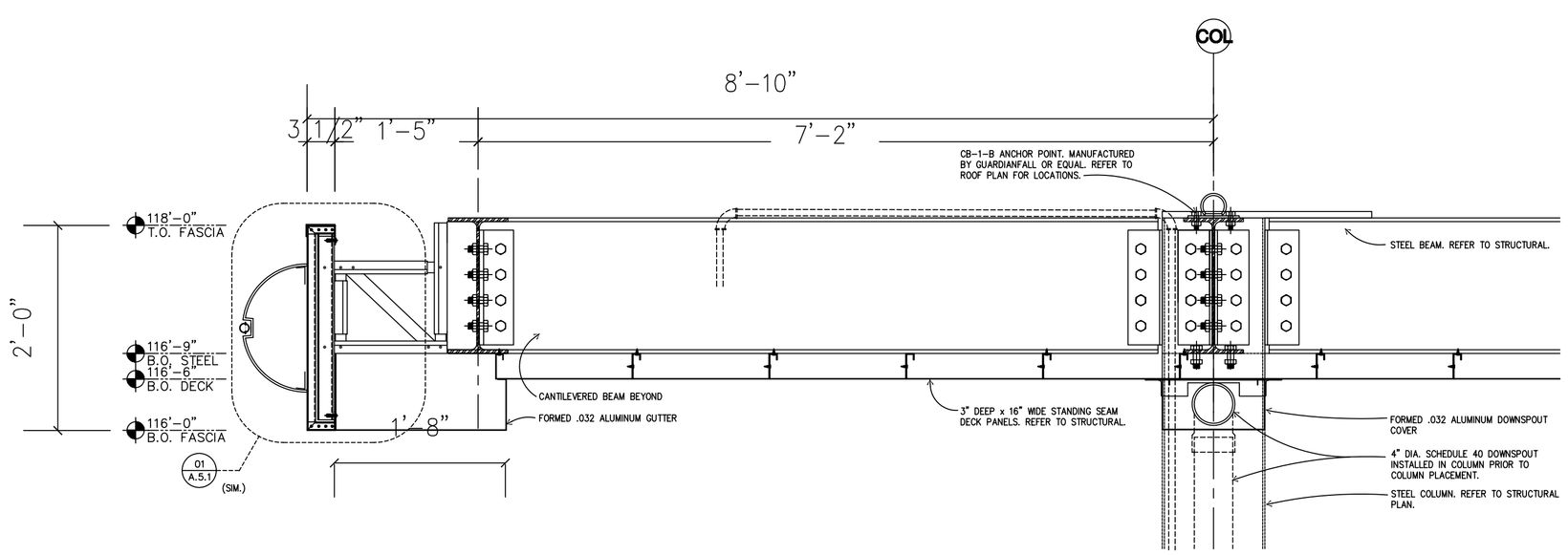

02 A.1 CANOPY SECTION
SCALE: 1" = 1'-0"

KEYED NOTES FOR REFLECTED CEILING PLAN:

1. EXPOSED STEEL FRAMING. REFER TO STRUCTURAL FRAMING PLAN.
2. SUSPENDED METAL DECK. REFER TO STRUCTURAL FRAMING PLAN.
3. METAL FLASHING AT RIDGE.
4. FORMED GUTTER.
5. RECESSED LIGHTS. REFER TO ELECTRICAL.
6. STRUCTURAL STEEL COLUMN. REFER TO STRUCTURAL FRAMING PLAN.
7. DRAIN LEADER.
8. FUEL DISPENSER BELOW
9. PIC UNIT BELOW

EXTERIOR PAINTS

C-02	COLOR: ARCO BLUE PMS 285C – SATIN FINISH
C-09	COLOR: PEARL MATCH RAL 1013 – SEMI-GLOSS
C-11	COLOR: ARCO LIGHT BLUE PMS 293C – SATIN FINISH

KEYED NOTES FOR ROOF PLAN:

1. EXPOSED STEEL FRAMING. REFER TO STRUCTURAL FRAMING PLAN.
2. SUSPENDED METAL DECK. REFER TO STRUCTURAL FRAMING PLAN.
3. ALUMINUM COMPOSITE MATERIAL FASCIA PANEL (BY OTHERS)
4. PLASTIC BULLNOSE WITH REVEAL (BY OTHERS).
5. ILLUMINATED SIGN BOX (BY OTHERS). FIELD VERIFY LOCATIONS.
6. FALL PROTECTION ANCHOR. REFER TO DETAIL 01–A.1.2

CLIENT:

PINNACLE REAL ESTATE HOLDINGS, INC.
RIVERSIDE COUNTY TRAVEL ZONE LLC
COO & CO-FOUNDER

BRAND:

ARCO

BP WEST COAST PRODUCTS, LLC

CONSULTANT:

WESTERN STATES
Engineering & Construction, Inc.
733 N. MAIN ST
ORANGE, CA 92867
714/769-2000
714/769-2002 Fax
www.wsecinc.com
A Design Build Co.

NO.	DATE	REVISION DESCRIPTION
1	11–17–03	BUILDING SUBMITTAL
2	4–19–04	REVISED PER PLAN CHECK & IN–HOUSE CORRECTIONS BUILDING SUBMITTAL
3	6–01–04	REVISED PER PLAN CHECK & IN–HOUSE CORRECTIONS BUILDING SUBMITTAL
4	8–10–04	REVISED PER PLAN CHECK & IN–HOUSE CORRECTIONS
5	9–27–04	REVISED PER PLAN CHECK & IN–HOUSE CORRECTIONS

SEAL:

REGISTERED PROFESSIONAL ENGINEER
KAMAL B. MOUGHANNI
NO. C051050
Exp. 9/30/05
CIVIL
STATE OF CALIFORNIA

CONFIDENTIALITY STATEMENT:
THE RECIPIENT OF THESE MATERIALS UNDERSTANDS THAT COPYRIGHT IN THE MATERIALS IS OWNED BY BP, AND ALSO, THE MATERIALS CONTAIN TRADE SECRETS AND CONFIDENTIAL BUSINESS INFORMATION OF BP. ACCORDINGLY, THE RECIPIENT AGREES TO RETAIN THESE MATERIALS IN STRICT CONFIDENCE AND AGREES NOT TO DISCLOSE THESE MATERIALS TO ANY OTHER PARTY AND FURTHER AGREES TO RESTRICT ACCESS TO THE MATERIALS. THE RECIPIENT AGREES TO USE THE MATERIALS ONLY FOR THE LIMITED PURPOSE FOR WHICH BP HAS MADE THE MATERIALS AVAILABLE, AND RECIPIENT AGREES TO RETURN ALL MATERIALS TO BP EITHER UPON COMPLETION OF THE INTENDED PURPOSE OR UPON THE REQUEST OF BP, WHICHEVER COMES FIRST.

DEVELOPMENT INFORMATION:

CANOPY

DOMINO 8
FLAT DECK

SITE ADDRESS:

23261 CAJALCO EXWY.
@ HARVILL AVENUE
PERRIS, California 92571

-

DESIGNED BY:	-	ALLIANCE Z&DM:	-
CHECKED BY:	-	BP REPM:	-
DRAWN BY:	-	ALLIANCE PM:	-
VERSION:		PROJECT NO:	E75403

DRAWING TITLE:

ROOF & REFL. CEILING PLANS AND DETAILS

SHEET NO:

DOFO
A.1